Chemical Concepts
Our customers stick with us.

Technical Data Sheet

High Performance Tape
General Purpose
VST6160G - Gray

VST 6160G

This "All-rounder" is a double-sided, general-purpose, acrylic-based adhesive tape. This conformable tape is especially designed for a variety of materials with high and medium surface energy like PVC and ABS. It also is capable of absorbing the different thermal expansions of two materials. This acrylic foam tape has a high initial tack. In combination with a primer, this **Chem-Set™ VST Tape** guarantees excellent adhesion performance even on low surface energy substrates.

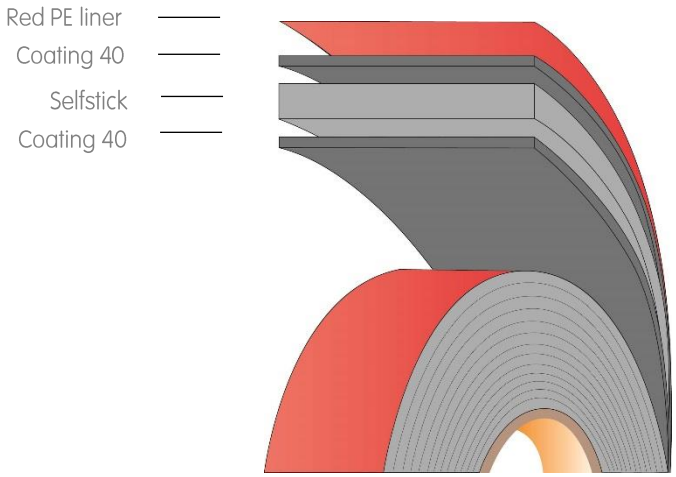

Thickness:	1,6 mm (0.062 inch) ±10%
Core:	Conformable acrylic
Adhesive:	Acrylic coating 40
Density:	840 kg/m³ (52lb/ft³)
Color:	Light Gray
Liner:	Red PE liner or Siliconised Paper liner
Temperature Resistance:	
Minimum	-40°C (-40°F)
Short term	160°C (320°F)
Long term	100°C (212°F)

90° Peel Adhesion	N/10mm (lb/in)	41 (23)		ASTM D3330
Dynamic Shear Strength	kPa (lb/in²)	540 (78)		ASTM D-1002
Normal Tensile	kPa (lb/in²)	550 (80)		ASTM D-897
Static Shear Strength	g/312mm² > 10,000 min. (7 days)	22°C (72°F) 66°C (150°F) 93°C (200°F) 121°C (250°F) 177°C (350°F)	1000 500 500	ASTM 3654

Suitable for:

- various high and medium surface energy plastics, glass, steel, aluminum, ceramics*

Available sizes:

- jumbo: 900mm x 165 m (76,2mm core)
- log: 900mm x 16,5/33 m (76,2mm core)
- slit roll: 4 – 250mm x 16,5/33 m (76,2mm core)
- spool roll: 5 – 25mm x max 700 m (152,4mm core)

Chemical Concepts
Our customers stick with us.

Technical Data Sheet

High Performance Tape
General Purpose
VST6160G - Gray

Product Information

Surface: Tape bonding is one of the most variable and easy technology mating substrates. Especially for assemblies made of different substrates having different thermal expansion rates bonding is a easy method for a long term durable joint. **Chem-Set™ VST tapes** allow a high variation in such substrates as all are available in different thickness. To ensure proper performance of such bonded part follow the following recommendations.

Design: A proper tape bond design means avoiding cleavage and peel forces. Design leading to pure shear and tensile loads have to be preferred to utilize full **Chem-Set™ VST tape** performance.

Surface Preparation: All bonding process require proper surface preparation / cleaning. This will enable **Chem-Set™ VST tapes** to get in direct contact with the surface creating full adhesion force. Remove most (polar) contaminations such as fingerprints and light oil. Check suitable cleaner with surface test inks. Use lint free tissues for such operations.

Surface Modification: If simple cleaning cannot achieve appropriate adhesion forces the following surface modifications can be used. All primer / activators should only be used on the area for bonding. Excess material has to be cleaned immediately.

Temperature: After proper surface preparation / modification **Chem-Set™ VST tape** should be applied at a temperature level above 18°C (65°F). For temperatures below this but above 0°C (32°F) use low temperature **Chem-Set™ VST tape**.

Pressure: Ensure immediate part assembly after liner removal. Pressure should be applied in rolling fashion at approx. I0N/cm^2. Recommended roller speed at 10 mm/s (24 in./min.). Higher velocities might require higher pressure or control with surface pressure films. **Chem-Set™ VST tape** achieve their full strength after 24h at ambient temperature. Higher temperatures can accelerate strength development.

Storage & Shelf Life: Store **Chem-Set™ VST tapes** between 5° and 35°C (40°-95°F). Humid condition causing condensation should be avoided. For products with non-siliconized liners shelf life is 24 months.

Disclaimer: All technical data in this product data sheet are based on Chemical Concepts experiences and external testing. These values are representative for the overall performance. These data sheets are NOT to be used for specification purposes or for your own specific application. It is your responsibility to test whether the tape is suitable for your application or project. Chemical Concepts will NOT be held liable for any information provided on this data sheet. Please follow the rules and regulations that are applicable in the state, county or country where the product(s) are being used. If you have any questions regarding the use of the **Chem-Set™ VST tapes**, please contact your local sales team. For questions on the standard warranty, please review our terms and conditions.

chemical-concepts.com
410 Pike Road • Huntingdon Valley, PA 19006
1 (800) 220-1966